B2.5 Transaction identifier field flows

This section shows the transaction identifier field flows for the different transaction types:

- B2.5.1 *Read transactions*
- B2.5.2 *Dataless transactions*
- B2.5.3 *Write transactions*
- B2.5.4 *DVMOp transaction*
- B2.5.5 *Transaction requests with Retry*
- B2.5.6 *Protocol Credit Return transaction*

In the associated figures:

- The fields included in each packet are:
  - For a Request packet: TgtID, SrcID, TxnID, StashNID, StashLPID, ReturnNID, ReturnTxnID, PGroupID, StashGroupID, and TagGroupID.
  - For a Response packet: TgtID, SrcID, TxnID, DBID, PGroupID, StashGroupID, and TagGroupID.
  - For a Data packet: TgtID, SrcID, TxnID, HomeNID, and DBID.
  - For a Snoop packet: SrcID, TxnID, FwdNID, FwdTxnID, and StashLPID.
- All fields with the same color are the same value.
- The curved loop-back arrows show how the Requester and Completer use fields from earlier packets to generate fields for subsequent packets.
- A box containing an asterisk [*] indicates when a field is first generated, that is, indicating the agent that determines the original value of the field.
- A field enclosed in parentheses indicates that the value is effectively a fixed value. Typically this is the case for the SrcID field when a packet is sent, and the TgtID field when a packet arrives at its destination.
- A field that is crossed-out indicates that the field is not valid.
- It is permitted for the TgtID of the original transaction to be remapped by the interconnect to a new value. This is shown by a box containing the letter R. This is explained in more detail in Chapter B3 *Network Layer*.

Note

An identifier field, in every packet sent, belongs to one of the following categories:

- New value. An asterisk indicates that a new value is generated.
- Generated from an earlier packet. A loop back arrow indicates the source.
- Fixed value. The value is enclosed in brackets.
- Not valid. The field is crossed-out.

In the following examples, any transaction identifiers that are not relevant for the example are sometimes omitted for clarity.

B2.5.1 Read transactions

This section shows the identifier field flows in Read transactions with and without Direct Data Transfer:

- B2.5.1.1 *ID value transfer with DMT*
- B2.5.1.2 *ID value transfer with DMT and separate Comp and Data*
- B2.5.1.3 *ID value transfer with DCT*
- B2.5.1.4 *ID value transfer without Direct Data Transfer*

Copyright © 2014, 2017-2025 Arm Limited or its affiliates. All rights reserved.
Non-confidential

B2.5.1.1 ID value transfer with DMT

Figure B2.23 shows how the Target and Transaction ID values in the DMT transaction messages are derived. For example, the value of SrcID in the ReadNoSnp request from the interconnect is assigned by the interconnect. Whereas the ReturnNID, used as TgtID in the Data response, is set to the value of SrcID of the received Read request.

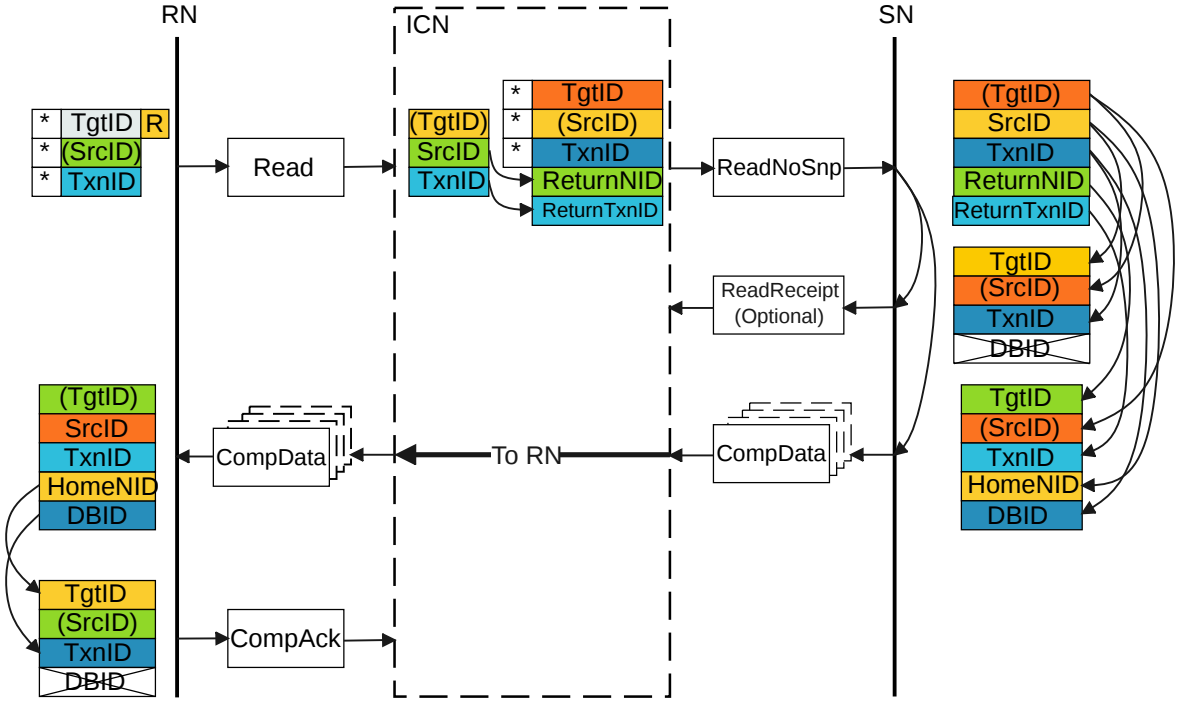

Figure B2.23: ID value transfer in a DMT transaction

The required steps in the flow that Figure B2.23 shows are:

1. The Requester starts the transaction by sending a Request packet.
   The identifier fields of the request are generated as follows:
   - The TgtID is determined by the destination of the Request.

     Note

     The TgtID field can be remapped to a different value by the interconnect.

   - The SrcID is a fixed value for the Requester.
   - The Requester generates a TxnID field that is unique for that Requester.
2. The recipient Home Node in the interconnect generates a Request to the Subordinate Node.
   The identifier fields of the request are generated as follows:
   - The TgtID is set to the value required for the Subordinate.
   - The SrcID is a fixed value for the Home.
   - The TxnID is a unique value generated by the Home.
   - The ReturnNID is set to the same value as the SrcID of the original request.

Copyright © 2014, 2017-2025 Arm Limited or its affiliates. All rights reserved.
Non-confidential

- The ReturnTxnID is set to the same value as the TxnID of the original request.

3. If the request to the Subordinate requires a ReadReceipt, the Subordinate provides the read receipt. The identifier fields of the ReadReceipt response are generated as follows:
   - The TgtID is set to the same value as the SrcID of the request.
   - The SrcID is a fixed value for the Subordinate. This also matches the TgtID received.
   - The TxnID is set to the same value as the TxnID of the request.
   - The DBID field is not valid.
4. The Subordinate provides the read data.
   The identifier fields of the Read data response are generated as follows:
   - The TgtID is set to the same value as the ReturnNID of the request.
   - The SrcID is a fixed value for the Subordinate. This also matches the TgtID received.
   - The TxnID is set to the same value as the ReturnTxnID of the request.
   - The HomeNID is set to the same value as the SrcID of the request.
   - The DBID is set to the same value as the TxnID of the request.
5. The Requester receives the read data and sends a completion acknowledge, CompAck, response.
   The identifier fields of the CompAck are generated as follows:
   - The TgtID is set to the same value as the HomeNID of the read data.
   - The SrcID is a fixed value for the Requester. This also matches the TgtID that was received.
   - The TxnID is set to the same value as the DBID of the read data.
   - The DBID field is not valid.

The CompAck response from Requester to Home is not required for all requests.

If the original request requires a ReadReceipt, the following additional step is included:

- The Home receives the Request packet and provides the read receipt. The identifier fields of the ReadReceipt response are generated as follows:
  - The TgtID is set to the same value as the SrcID of the request.
  - The SrcID is a fixed value for the Completer. This also matches the TgtID received.
  - The TxnID is set to the same value as the TxnID of the request.
  - The DBID field is not valid.

B2.4 *Transaction identifier fields* details when the TxnID value and DBID value can be reused.

B2.5.1.2 ID value transfer with DMT and separate Comp and Data

Figure B2.24 shows how the identifier field values are derived in DMT transaction messages that use separate Comp and Data.

Copyright © 2014, 2017-2025 Arm Limited or its affiliates. All rights reserved.
Non-confidential

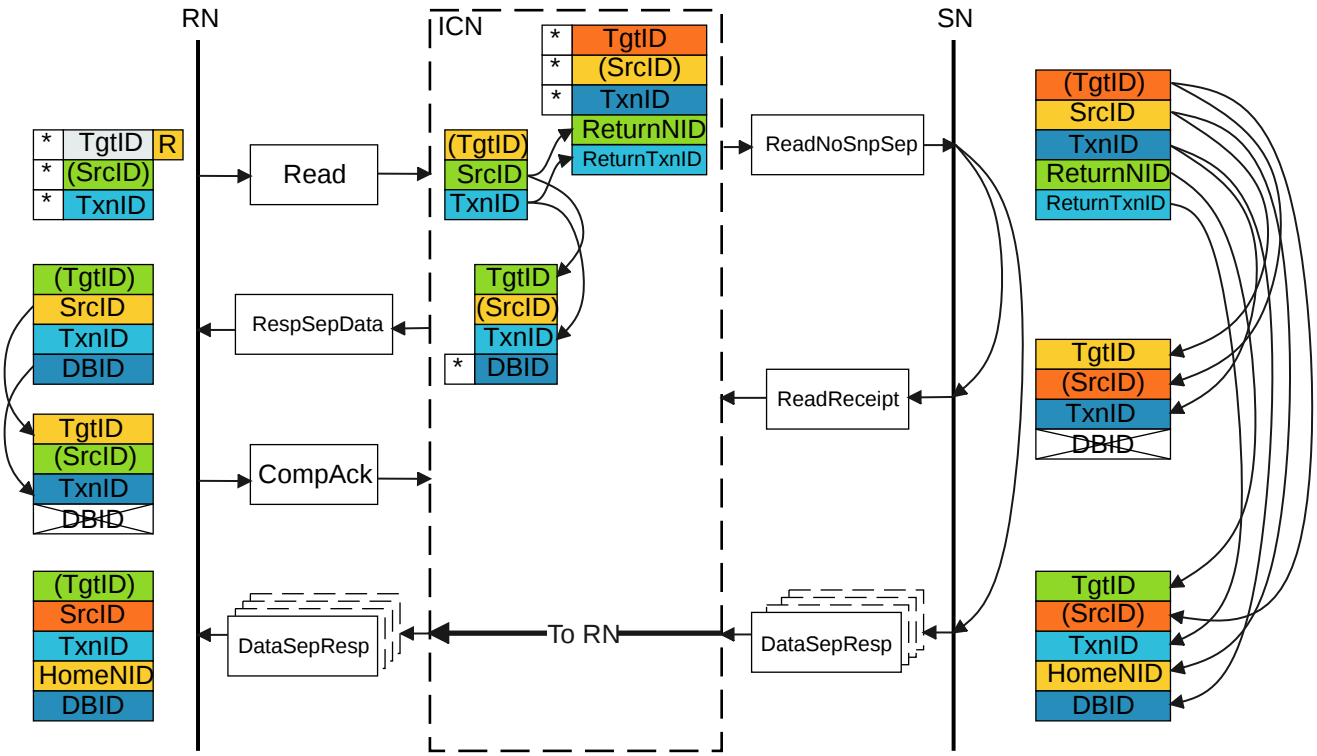

Figure B2.24: ID value transfer in a DMT transaction with separate Comp and Data

The required steps in the flow that Figure B2.24 shows are:

1. The Requester starts the transaction by sending a Request packet.
   The identifier fields of the request are generated as follows:
   - The TgtID is determined by the destination of the Request.

     Note

     The TgtID field can be remapped to a different value by the interconnect.

   - The SrcID is a fixed value for the Requester.
   - The Requester generates a TxnID field that is unique for that Requester.
2. The recipient Home Node in the interconnect generates a request to the Subordinate Node.
   The identifier fields of the request are generated as follows:
   - The TgtID is set to the value required for the Subordinate.
   - The SrcID is a fixed value for the Home.
   - The TxnID is a unique value generated by the Home.
   - The ReturnNID is set to the same value as the SrcID of the original request.
   - The ReturnTxnID is set to the same value as the TxnID of the original request.
3. The recipient Home Node in the interconnect provides the separate Read response.
   The identifier fields of the read response are generated as follows:
   - The TgtID is set to the same value as the SrcID of the request.

Copyright © 2014, 2017-2025 Arm Limited or its affiliates. All rights reserved.
Non-confidential

- The SrcID is a fixed value for the Home.
- The TxnID is set to the same value as the TxnID of the original request.
- The DBID value is a unique value generated by the Home and is the same value as the TxnID in the request to the Subordinate.

4. The Requester receives the Read response and sends a completion acknowledge, CompAck, response. The identifier fields of the CompAck are generated as follows:
   - The TgtID is set to the same value as the SrcID of the read response.
   - The SrcID is a fixed value for the Requester.
   - The TxnID is set to the unique DBID value generated by the Home.
   - The DBID value is not valid.
5. The request to the Subordinate requires a ReadReceipt. The Subordinate provides the read receipt. The identifier fields of the ReadReceipt response are generated as follows:
   - The TgtID is set to the same value as the SrcID of the request.
   - The SrcID is a fixed value for the Subordinate. This also matches the TgtID received.
   - The TxnID is set to the same value as the TxnID of the request.
6. The Subordinate provides the separate read data. The identifier fields of the read data are generated as follows:
   - The TgtID is set to the same value as the ReturnNID of the request.
   - The SrcID is a fixed value for the Subordinate. This also matches the TgtID received.
   - The TxnID is set to the same value as the ReturnTxnID of the request.
   - The HomeNID is set to the same value as the SrcID of the request.
   - The DBID is set to the same value as the TxnID of the request.

B2.5.1.3 ID value transfer with DCT

Figure B2.25 shows how the identifier field values are derived in DCT transaction messages. In this example, the data is forwarded to a Request Node and a Snoop response is sent to HN-F with or without data.

Copyright © 2014, 2017-2025 Arm Limited or its affiliates. All rights reserved.
Non-confidential

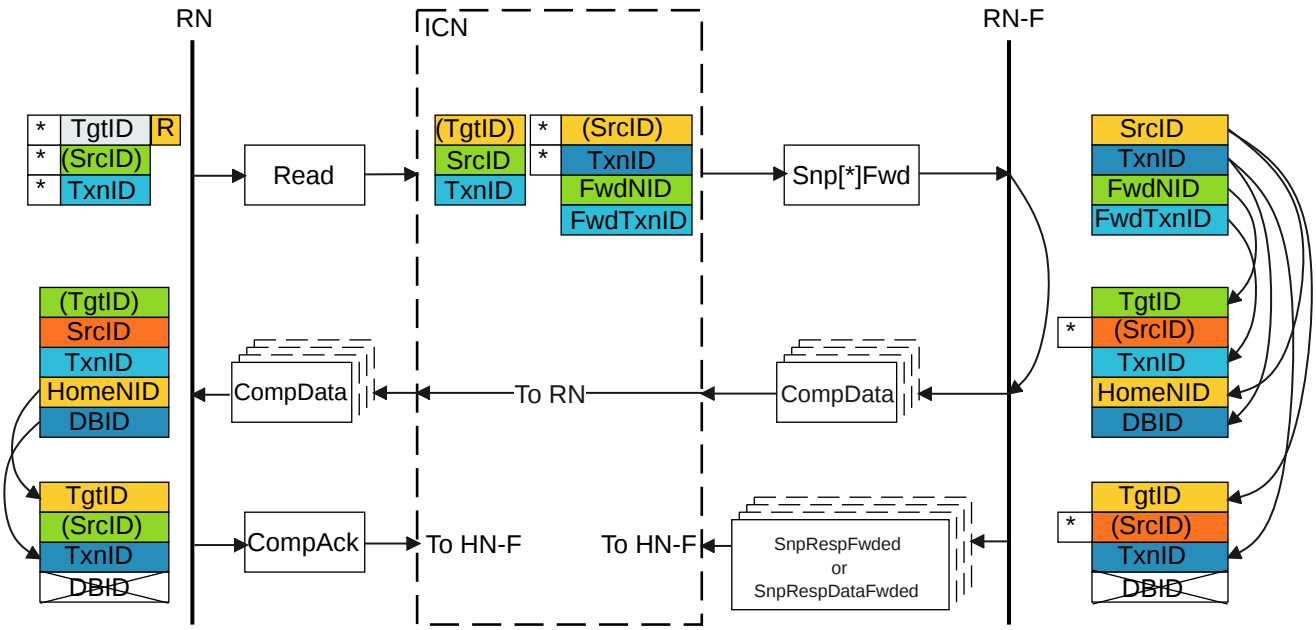

Figure B2.25: ID value transfer in a DCT transaction

The required steps in the flow that Figure B2.25 shows are:

1. The Requester starts the transaction by sending a Request packet.
   The identifier fields of the request are generated as follows:
   - The TgtID is determined by the destination of the Request.

     Note

     The TgtID field can be remapped to a different value by the interconnect.

   - The SrcID is a fixed value for the Requester.
   - The Requester generates a TxnID field that is unique for that Requester.
2. The recipient Home Node in the interconnect generates a Forwarding snoop to the RN-F node.
   The identifier fields of the snoop are generated as follows:
   - The SrcID is a fixed value for the Home.
   - The TxnID is a unique value generated by the Home.
   - The FwdNID is set to the same value as the SrcID of the original request.
   - The FwdTxnID is set to the same value as the TxnID of the original request.
3. The RN-F provides the read data.
   The identifier fields of the Read data response are generated as follows:
   - The TgtID is set to the same value as the FwdNID of the snoop.
   - The SrcID is a fixed value for the RN-F.
   - The TxnID is set to the same value as the FwdTxnID of the snoop.
   - The HomeNID is set to the same value as the SrcID of the snoop.
   - The DBID is set to the same value as the TxnID of the snoop.

Copyright © 2014, 2017-2025 Arm Limited or its affiliates. All rights reserved.
Non-confidential

4. The RN-F also provides a response to Home, either with or without read data.
   The identifier fields of the response are generated as follows:
   - The TgtID is set to the same value as the SrcID of the snoop.
   - The SrcID is a fixed value for the RN-F.
   - The TxnID is set to the same value as the TxnID of the snoop.
   - The DBID field is not valid.
5. The Requester receives the read data and sends a completion acknowledge, CompAck, response.
   The identifier fields of the CompAck are generated as follows:
   - The TgtID is set to the same value as the HomeNID of the read data.
   - The SrcID is a fixed value for the Requester. This also matches the TgtID that was received.
   - The TxnID is set to the same value as the DBID of the read data.
   - The DBID field is not valid.

Note

An optional ReadReceipt from the interconnect to Requester can also be included.

B2.5.1.4 ID value transfer without Direct Data Transfer

This section gives an example of a Read identifier field flow without DMT or DCT and describes the use of the TxnID and DBID fields for Read transactions.

The Requester and Completer in this example are a Request Node and an HN-F respectively.

The identifier field flow includes an optional ReadReceipt response from the Completer, and an optional CompAck response from the Requester.

For Read transactions that include a CompAck response, the DBID is used by the Completer to associate the CompAck with the original transaction.

A Read transaction that does not include a CompAck response does not require a valid DBID field in the data response.

Figure B2.26 shows the ID value transfer.

Copyright © 2014, 2017-2025 Arm Limited or its affiliates. All rights reserved.
Non-confidential

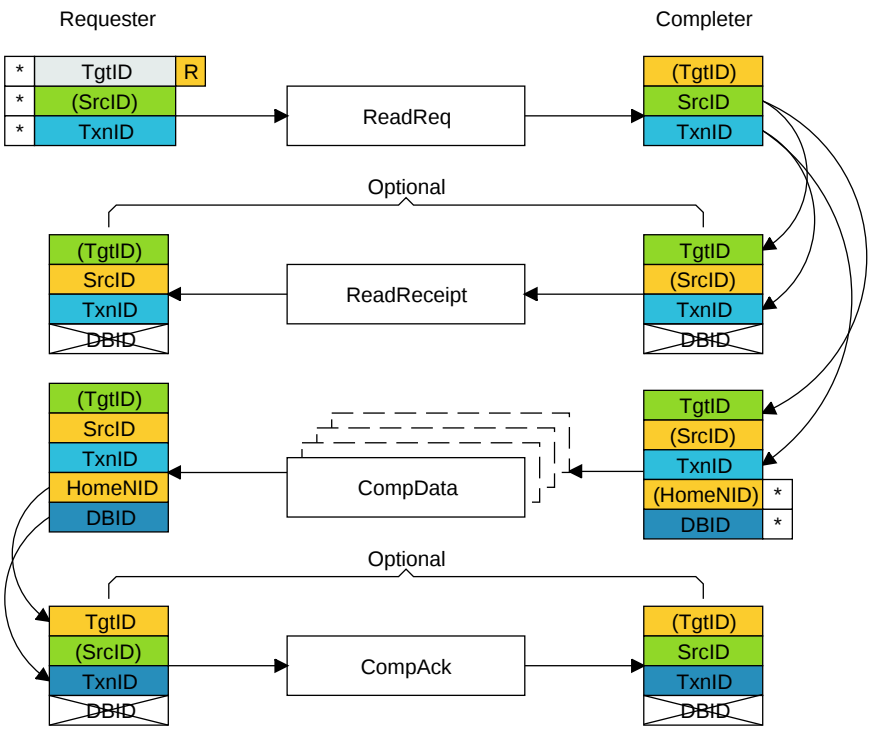

Figure B2.26: ID value transfer in a Read request with ReadReceipt and CompAck

The required steps in the flow that Figure 2-26 shows are:

1. The Requester starts the transaction by sending a Request packet.
   The identifier fields of the request are generated as follows:
   - The TgtID is determined by the destination of the Request.

     Note

     The TgtID field can be re-mapped to a different value by the interconnect.

   - The SrcID is a fixed value for the Requester.
   - The Requester generates a TxnID field that is unique for that Requester.
2. If the transaction includes a ReadReceipt, the Completer receives the Request packet and provides the read receipt.
   The identifier fields of the ReadReceipt response are generated as follows:
   - The TgtID is set to the same value as the SrcID of the request.
   - The SrcID is a fixed value for the Completer. This also matches the TgtID received.
   - The TxnID is set to the same value as the TxnID of the request.
   - The DBID field is not valid.
3. The Completer receives the Request packet and provides the read data.
   The identifier fields of the read data response are generated as follows:
   - The TgtID is set to the same value as the SrcID of the request.
   - The SrcID is a fixed value for the Completer. This also matches the TgtID received.

Copyright © 2014, 2017-2025 Arm Limited or its affiliates. All rights reserved.
Non-confidential

- The TxnID is set to the same value as the TxnID of the request.
- The HomeNID is a fixed value for the Completer. This also matches the TgtID received.
- The Completer generates a unique DBID value if ExpCompAck in the request is 1.

4. The Requester receives the read data and sends a completion acknowledge, CompAck, response. The identifier fields of the CompAck are generated as follows:
   - The TgtID is set to the same value as the HomeNID of the read data.
   - The SrcID is a fixed value for the Requester. This also matches the TgtID that was received.
   - The TxnID is set to the same value as the DBID of the read data.
   - The DBID field is not valid.

B2.5.2 Dataless transactions

For Dataless transactions, except for CleanSharedPersistSep and StashOnceSep, the use of identifier fields is similar to B2.5.1.4 *ID value transfer without Direct Data Transfer*. The only difference is that the response from the Completer to the Requester is sent as a single packet on the CRSP channel instead of multiple packets on the RDAT channel.

For StashOnceSep transactions, the StashGroupID value is sent in the request from the Request Node to the interconnect and the value is returned in the StashDone and CompStashDone responses. The TxnID value in the StashDone response is inapplicable and must be zero.

The description of ID value transfer in a CleanSharedPersistSep transaction follows.

B2.5.2.1 ID value transfer in a CleanSharedPersistSep transaction

Figure B2.27 shows how the identifier field values are derived in CleanSharedPersistSep transaction messages that use separate Comp and Persist responses. In Figure B2.27, PCMOSep represents CleanSharedPersistSep.

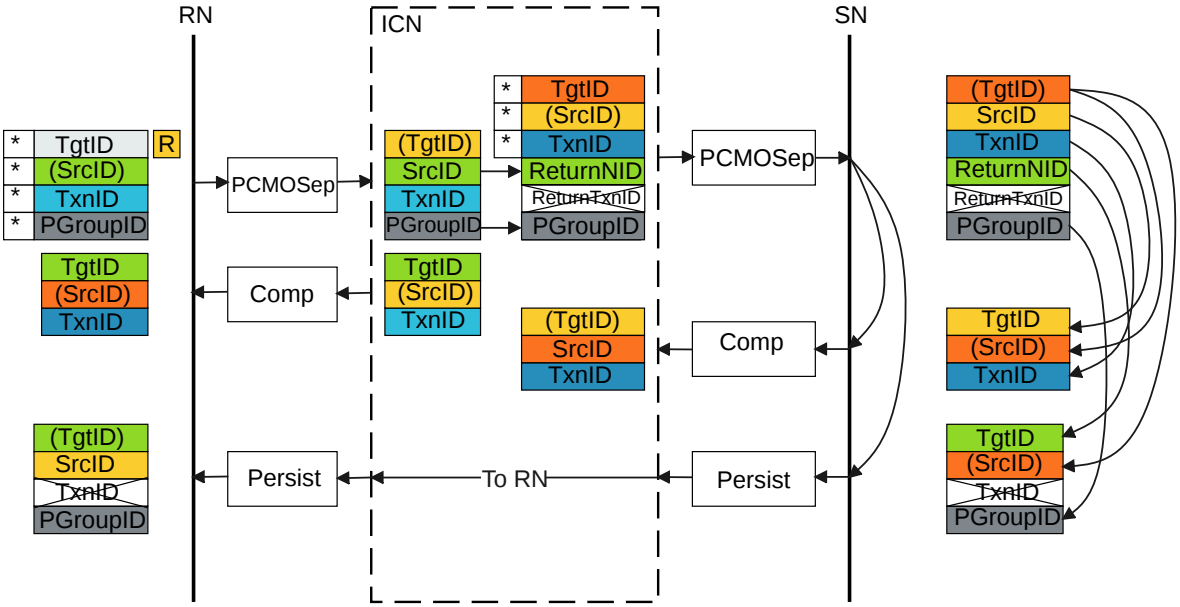

Figure B2.27: ID value transfer in a CleanSharedPersistSep transaction

The required steps in the flow that Figure B2.27 shows are:

Copyright © 2014, 2017-2025 Arm Limited or its affiliates. All rights reserved.
Non-confidential

1. The Requester starts the transaction by sending a Request packet.
   The identifier fields of the Request are generated as follows:
   - The TgtID is determined by the destination of the Request.

     Note

     The TgtID field can be remapped to a different value by the interconnect.

   - The SrcID is a fixed value for the Requester.
   - The Requester generates a TxnID value that is unique for that Requester.

   The TxnID value can be reused by the Requester after receiving the Comp response.

   - The Requester generates a new PGroupID value, or reuses a PGroupID value currently in use.
2. The recipient Home Node in the interconnect generates a request to the Subordinate.
   The identifier fields of the request to the Subordinate Node are generated as follows:
   - The TgtID is set to the value required for the Subordinate.
   - The SrcID is a fixed value for the Home.
   - The TxnID is a unique value generated by the Home.

   The TxnID value can be reused by the Home after receiving the Comp response.

   - The ReturnNID is set to the same value as the SrcID of the original request.
   - The ReturnTxnID is inapplicable and must be zero.
   - The PGroupID is set to the same value as the PGroupID of the original request.
3. The recipient Home Node in the interconnect sends a Comp response to the Requester.
   The identifier fields of the Comp response to the Requester are generated as follows:
   - The TgtID is set to the same value as the SrcID of the original request.
   - The SrcID is a fixed value for the Home.
   - The TxnID is set to the same value as the TxnID of the original request.
4. The recipient Home Node can optionally send a Persist response to the Requester.
   The identifier fields of the optional Persist response from the Home Node to the Requester, not shown in Figure B2.27, are generated as follows:
   - The TgtID is set to the same value as the SrcID of the request.
   - The SrcID is a fixed value for the Home Node.
   - The TxnID is inapplicable and must be zero.
   - The PGroupID is set to the same value as the PGroupID of the request.

   The recipient Home Node can optionally send a combined CompPersist response to the Requester, instead of separate Comp and Persist responses.
   The identifier fields in the CompPersist response are generated as follows:
   - The TgtID is set to the same value as the SrcID of the original request.
   - The SrcID is a fixed value for the Home.
   - The TxnID is set to the same value as the TxnID of the original request.
   - The PGroupID is set to the same value as the PGroupID of the original request.

Copyright © 2014, 2017-2025 Arm Limited or its affiliates. All rights reserved.
Non-confidential

5. The Subordinate Node generates a Comp to the Home Node.
   The identifier fields of the Comp response from the Subordinate Node are generated as follows:
   - The TgtID is set to the same value as the SrcID of the request.
   - The SrcID is a fixed value for the Subordinate.
   - The TxnID is set to the same value as the TxnID of the request.
6. The Subordinate Node also generates a Persist response to either to the Requester or the Home.
   The identifier fields of the Persist response from the Subordinate Node are generated as follows:
   - The TgtID is set to the same value as the ReturnNID of the request.
   - The SrcID is a fixed value for the Subordinate.
   - The TxnID is inapplicable and must be zero.
   - The PGroupID is set to the same value as the PGroupID of the request.
7. The Subordinate Node can optionally send a combined CompPersist response to the Home Node, instead of separate Comp and Persist responses if the ReturnNID and SrcID of the request are the same value.
   The identifier fields of the CompPersist response from the Subordinate are generated as follows:
   - The TgtID is set to the same value as the SrcID of the request.
   - The SrcID is a fixed value for the Subordinate.
   - The TxnID is set to the same value as the TxnID of the request.
   - The PGroupID is set to the same value as the PGroupID of the request.

B2.5.3 Write transactions

This section describes the use of TxnID and DBID fields for Write transactions:

- B2.5.3.1 *CopyBack*
- B2.5.3.2 *WriteNoSnp transaction*
- B2.5.3.3 *WriteUnique transaction*
- B2.5.3.4 *StashOnce or StashOnceSep transaction*

B2.5.3.1 CopyBack

This section describes the use of the identifier fields for a CopyBack transaction.

Figure B2.28 shows the identifier value transfer.

Copyright © 2014, 2017-2025 Arm Limited or its affiliates. All rights reserved.
Non-confidential

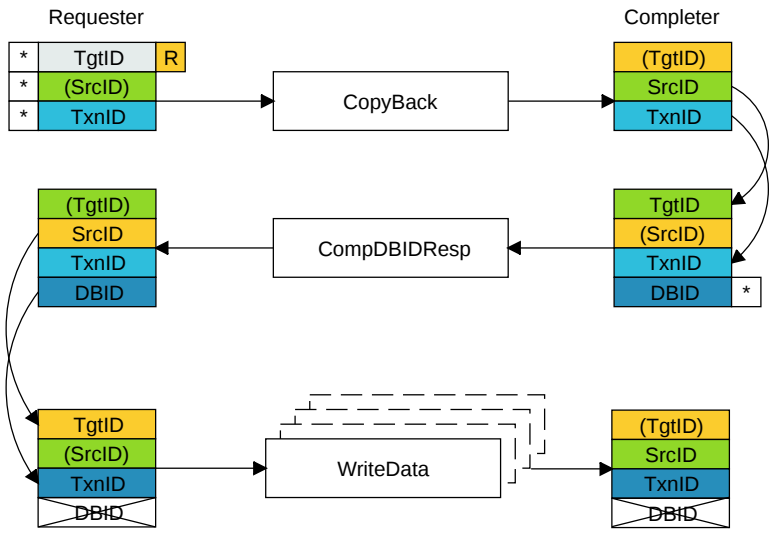

Figure B2.28: ID value transfer in a CopyBack

The required steps in the flow that Figure B2.28 shows are:

1. The Requester starts the transaction by sending a Request packet.
   The identifier fields of the request are generated as follows:
   - The TgtID is determined by the destination of the Request.

     Note

     The TgtID field can be remapped to a different value by the interconnect.

   - The SrcID is a fixed value for the Requester.
   - The Requester generates a unique TxnID field.
2. The Completer receives the Request packet and generates a CompDBIDResp response.
   The identifier fields of the response are generated as follows:
   - The TgtID is set to the same value as the SrcID of the request.
   - The SrcID is a fixed value for the Completer. This also matches the TgtID received.
   - The TxnID is set to the same value as the TxnID of the request.
   - The Completer generates a unique DBID value.
3. The Requester receives the CompDBIDResp response and sends the write data.
   The identifier fields of the write data are generated as follows:
   - The TgtID is set to the same value as the SrcID of the CompDBIDResp response. This can be different from the original TgtID of the request if the value was remapped by the interconnect.
   - The SrcID is a fixed value for the Requester.
   - The TxnID is set to the same value as the DBID value provided in the CompDBIDResp response.
   - The DBID field in the write data is not used.
   - The TgtID, SrcID, and TxnID fields must be the same for all write data packets.

Copyright © 2014, 2017-2025 Arm Limited or its affiliates. All rights reserved.
Non-confidential

After receiving the CompDBIDResp response, the Requester can reuse the same TxnID value used in the request packet for another transaction.

4. The Completer receives the write data and uses the TxnID field, which now contains the DBID value that the Completer generated. This helps to determine which transaction to associate the write data.

   After receiving all write data packets, the Completer can reuse the same DBID value for another transaction.

B2.5.3.2 WriteNoSnp transaction

This section describes the use of the identifier fields for a WriteNoSnp transaction.

Figure B2.29 does not show the Memory Tagging supported TagGroupID flow. For TagGroupID transfer details, see B12.5 *Write transactions*.

Figure B2.29 shows the identifier value transfer for separate Comp and DBIDResp. The Completer can opportunistically combine the Comp and DBIDResp into a single CompDBIDResp response. The Requester can opportunistically combine NonCopyBackWriteData with CompAck.

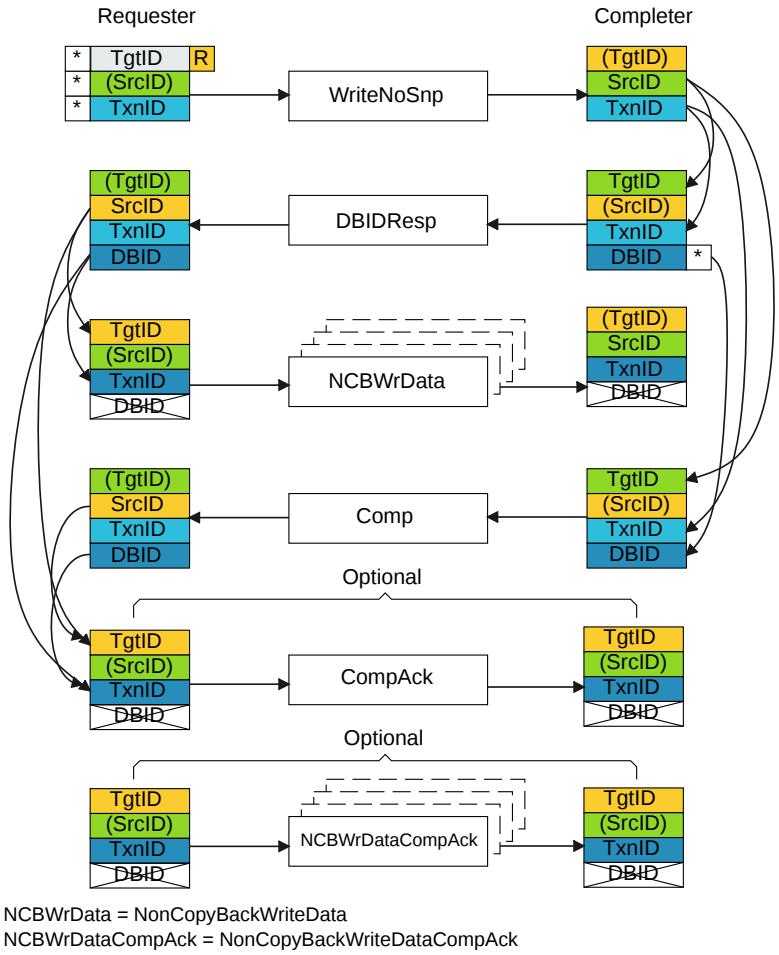

Figure B2.29: ID value transfer in a WriteNoSnp

The uses of the identifier fields are the same as for a transaction with a combined response with the additional requirements that:

- The identifier fields used for the separate DBIDResp and Comp responses must be identical.

Copyright © 2014, 2017-2025 Arm Limited or its affiliates. All rights reserved.
Non-confidential

- The TxnID value must only be reused by a Requester when both the DBIDResp and Comp responses have been received.

The required steps in the flow that Figure B2.29 shows are:

1. The Requester starts the transaction by sending a Request packet.
   The identifier fields of the request are generated as follows:
   - The TgtID is determined by the destination of the Request.

     Note

     The TgtID field can be remapped to a different value by the interconnect.

   - The SrcID is a fixed value for the Requester.
   - The Requester generates a unique TxnID field.
2. The Completer receives the Request packet and generates a DBIDResp response.
   The identifier fields of the response are generated as follows:
   - The TgtID is set to the same value as the SrcID of the request.
   - The SrcID is a fixed value for the Completer. This also matches the TgtID received.
   - The TxnID is set to the same value as the TxnID of the request.
   - The Completer generates a unique DBID value.
3. The Requester receives the DBIDResp response and sends the write data.
   The identifier fields of the write data are generated as follows:
   - The TgtID is set to the same value as the SrcID of the DBIDResp response. This can be different from the original TgtID of the request if the value was remapped by the interconnect.
   - The SrcID is a fixed value for the Requester.
   - The TxnID is set to the same value as the DBID value provided in the DBIDResp response.
   - The DBID field in the write data is not used.
   - The TgtID, SrcID, and TxnID fields must be the same for all write data packets.
4. The Completer receives the write data and uses the TxnID field, which now contains the DBID value that the Completer generated, to determine which transaction the write data is associated with.
5. The Completer generates a Comp response when the transaction is complete.
   The identifier fields of the Comp response must be the same as the DBIDResp response and are generated as follows:
   - The TgtID is set to the same value as the SrcID of the request.
   - The SrcID is a fixed value for the Completer. This also matches the TgtID received.
   - The TxnID is set to the same value as the TxnID of the request.
   - The Completer uses the same DBID value as is used in the DBIDResp response.
6. The Requester sends a CompAck message, if required by the transaction, after receiving DBIDResp or Comp.
   The identifier fields of the CompAck are generated as follows:
   - The TgtID is set to the same value as the SrcID of the DBIDResp or Comp response.
   - The SrcID is a fixed value for the Requester. This also matches the TgtID that was received.
   - The TxnID is set to the same value as the DBID of the DBIDResp or Comp response.

Copyright © 2014, 2017-2025 Arm Limited or its affiliates. All rights reserved.
Non-confidential

- The DBID field is not valid.

After receiving both the Comp and DBIDResp response, the Requester can reuse the same TxnID value for another transaction.

After receiving all the write data packets, the Completer can reuse the same DBID value for another transaction.

Note

There is no ordering requirement between the separate DBIDResp and Comp responses. It is required that the values used are identical when the two messages originate from the same source.

B2.5.3.3 WriteUnique transaction

This section describes the use of the identifier fields for a WriteUnique transaction.

Figure B2.30 does not show the Memory Tagging supported TagGroupID flow. For TagGroupID transfer details, see B12.5 *Write transactions*.

Under certain circumstances, the WriteUnique transaction can also include a CompAck response from the Requester to the Completer. In this case, the additional rules for the use of the identifier fields are:

- The TgtID, SrcID, and TxnID identifier fields of the CompAck response from the Requester to the Completer must be the same as the fields used for the write data, that is:
  - The TgtID is set to the same value as the SrcID of the CompDBIDResp response. If separate Comp and DBIDResp responses are given, the TgtID is set to the same value as the SrcID of either the Comp or DBIDResp response because the SrcID value in both must be identical. However, this can be different from the original TgtID of the request if the value has been remapped by the interconnect.
  - The SrcID is a fixed value for the Requester.
  - The TxnID is set to the same value as the DBID value provided in the CompDBIDResp response. If separate Comp and DBIDResp responses are given, the TxnID is set to the same value as the DBID of either the Comp or DBIDResp response because the DBID value in both must be identical.
  - The DBID field in the WriteData and in the CompAck is not used.
  - If a combined WriteData and CompAck response is sent, the TgtID is set to the same value as the SrcID in the Comp, DBIDResp, or CompDBIDResp, and the TxnID in the combined response is set to the same value as the DBID in Comp, DBIDResp, or CompDBIDResp.
- The Completer must receive all items of write data and the CompAck response before reusing the same DBID value for another transaction.

Figure B2.30 shows the identifier value transfer with a combined CompDBIDResp response.

Copyright © 2014, 2017-2025 Arm Limited or its affiliates. All rights reserved.
Non-confidential

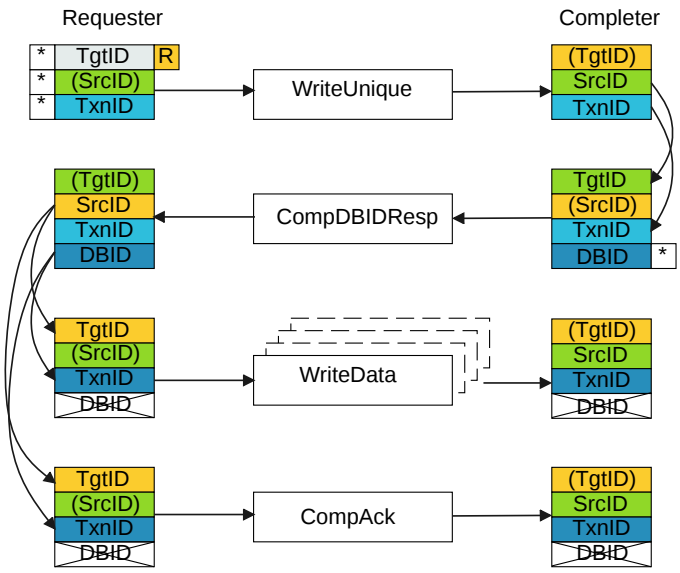

Figure B2.30: ID value transfer with a combined CompDBIDResp response

Figure B2.31 shows the identifier value transfer with a combined WriteData and CompAck response.

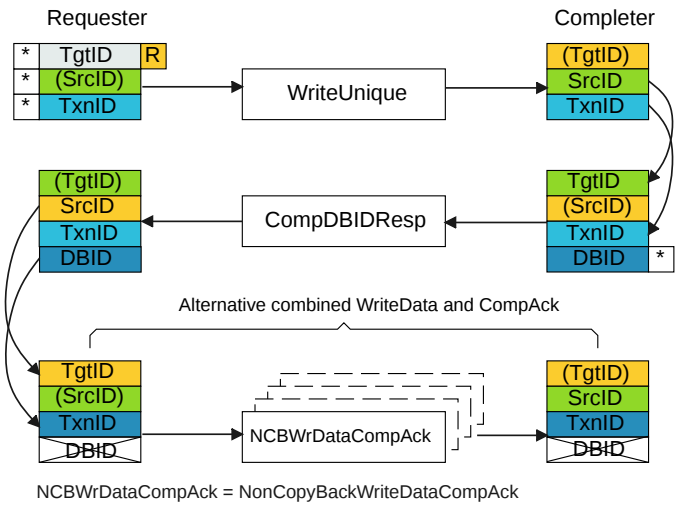

Figure B2.31: ID value transfer with a combined WriteData and CompAck response

B2.5.3.4 StashOnce or StashOnceSep transaction

This section describes the use of the identifier fields for a StashOnce or StashOnceSep transaction with DataPull.

Figure B2.32 shows the identifier value transfer.

Copyright © 2014, 2017-2025 Arm Limited or its affiliates. All rights reserved.
Non-confidential

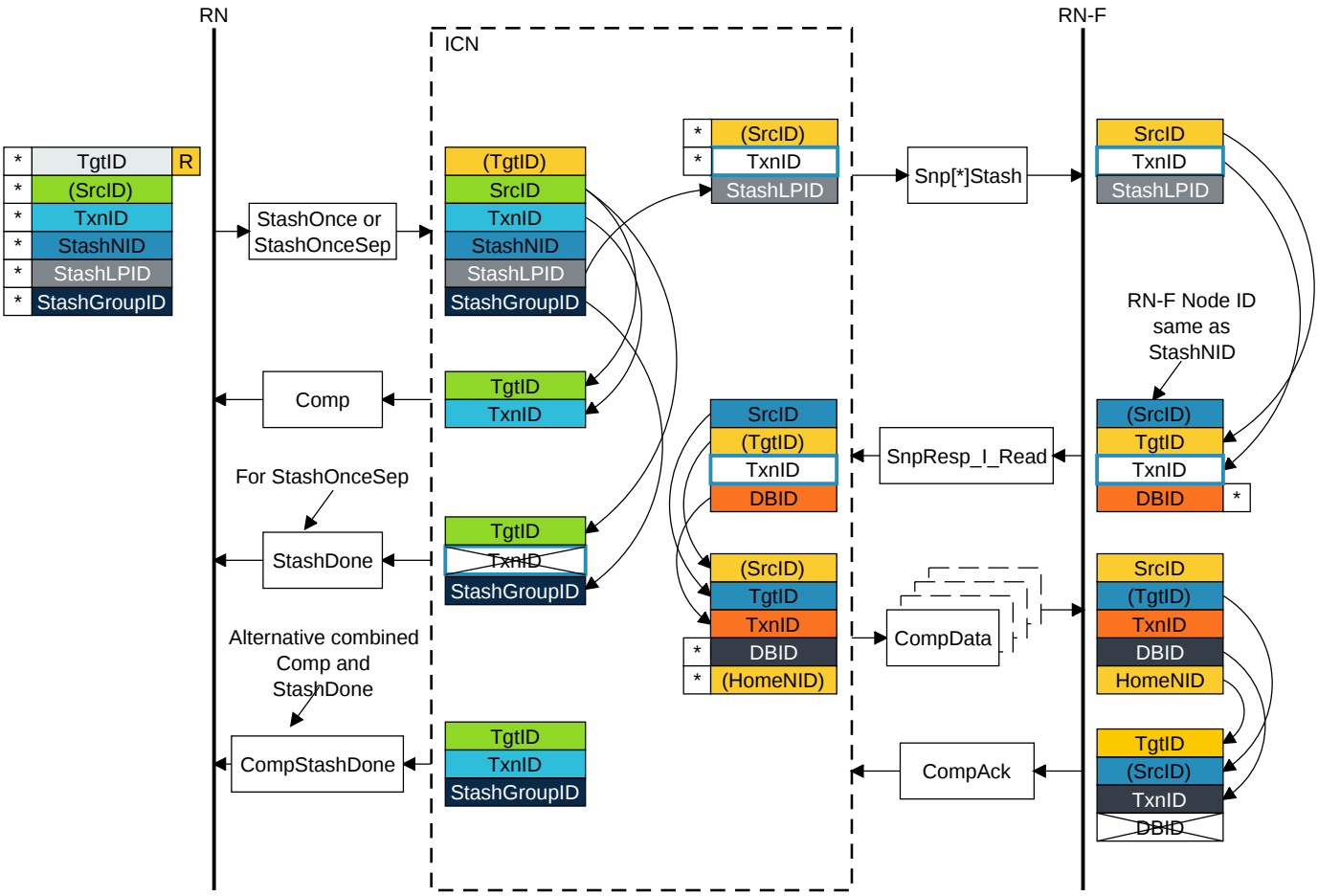

Figure B2.32: ID value transfer in a Stash transaction

The required steps in the flow that Figure B2.32 shows are:

1. The Requester starts the transaction by sending a Stash request packet.
   The identifier fields of the request are generated as follows:
   - The TgtID is determined by the destination of the Request.

     Note

     The TgtID field can be remapped to a different value by the interconnect.

   - The SrcID is a fixed value for the Requester.
   - The Requester generates a TxnID field that is unique for that Requester.
   - The Requester includes the StashNID field to indicate to which RN-F to send the Stash.
   - The Requester includes the StashLPID field to indicate the LP within the RN-F.
2. The Home Node in the interconnect receives the Stash request packet and sends the Comp response to the Request Node.
   The identifier fields of the Comp response are generated as follows:
   - The TgtID is set to the same value as the SrcID of the request.

Copyright © 2014, 2017-2025 Arm Limited or its affiliates. All rights reserved.
Non-confidential

- The TxnID is set to the same value as the TxnID of the request.

3. The Home Node in the interconnect, for the StashOnceSep request, sends the StashDone response to the Request Node.
   The identifier fields of the StashDone response are generated as follows:
   - The TgtID is set to the same value as the SrcID of the request.
   - The TxnID is not valid.
   - StashGroupID is set to the same value as the StashGroupID of the request.

   Alternatively for the StashOnceSep request, the Home Node in the interconnect sends the combined CompStashDone response instead of separate Comp and StashDone responses to the Request Node.

   The identifier fields of the CompStashDone response are generated as follows:
   - The TgtID is set to the same value as the SrcID of the request.
   - The TxnID is set to the same value as the TxnID of the request.
   - The StashGroupID is set to the same value as the StashGroupID of the request.
4. The Home Node in the interconnect generates a snoop with Stash to the appropriate RN-F.
   The identifier fields of the request are generated as follows:
   - The SrcID is a fixed value for the Home.
   - The TxnID is a unique value generated by the Home.
   - The StashLPID is set to the same value as the StashLPID of the original request.

   Note

   A Snoop request does not include a TgtID field.

5. The snooped RN-F generates a Snoop response. In this example, a Data Pull indication is included.
   The identifier fields of the Snoop response are generated as follows:
   - The TgtID is set to the same value as the SrcID of the request.
   - The SrcID is a fixed value for the RN-F.
   - The TxnID is set to the same value as the TxnID of the request.
   - The DBID field is a unique value generated by the RN-F.
6. The Home provides the read data.
   The identifier fields of the read Data response are generated as follows:
   - The TgtID is set to the same value as the SrcID of the Snoop response.
   - The SrcID is a fixed value for the Home.

   Note

   In this example, the read data is being provided by the Home.

   - The TxnID is set to the same value as the DBID of the Snoop response.
   - The DBID field is a unique value generated by Home.
   - The HomeNID is a fixed value for the Home.
7. The RN-F receives the read data and sends a completion acknowledge, CompAck, response.
   The identifier fields of the CompAck are generated as follows:

Copyright © 2014, 2017-2025 Arm Limited or its affiliates. All rights reserved.
Non-confidential

- The TgtID is set to the same value as the HomeNID of the read data.
- The SrcID is a fixed value for the RN-F. This also matches the TgtID received.
- The TxnID is set to the same value as the DBID of the read data.
- The DBID field is not valid.

B2.5.4 DVMOp transaction

The use of TgtID, SrcID, TxnID, and DBID identifier fields for a DVMOp transaction is identical to those in the B2.5.3.2 *WriteNoSnp transaction*.

B2.5.5 Transaction requests with Retry

For transactions that receive a RetryAck response, there are specific rules on how the identifier fields are used.

See B2.10 *Request Retry*, for more details on the Retry mechanism, and B2.5.6 *Protocol Credit Return transaction* for rules about the return of unused credits.

Figure B2.33 shows the identifier value transfer.

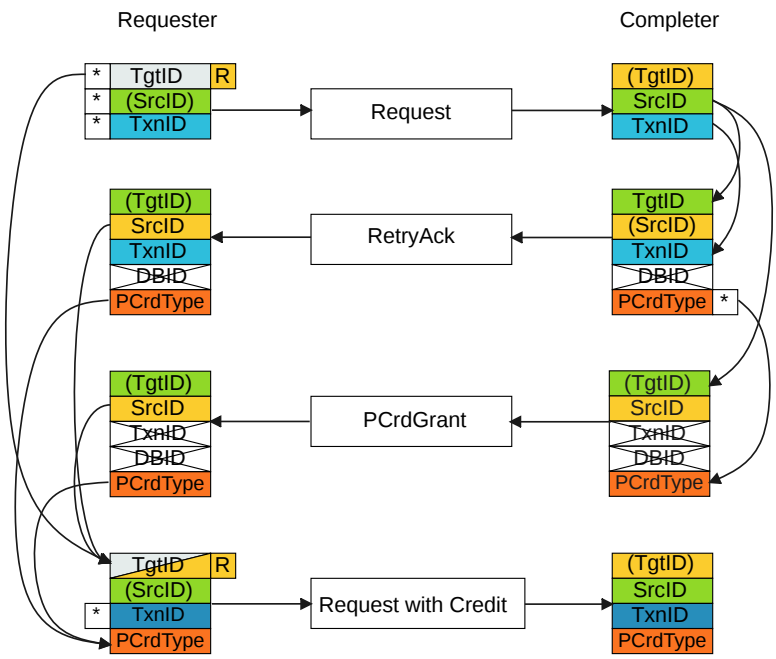

Figure B2.33: ID value transfer in a transaction request with retry

The required steps in the flow that Figure B2.33 shows are:

1. The Requester starts the transaction by sending a Request packet.
   The identifier fields of the request are generated as follows:
   - The TgtID is determined by the destination of the Request.

     Note

     The TgtID field can be remapped to a different value by the interconnect.

   - The SrcID is a fixed value for the Requester.

Copyright © 2014, 2017-2025 Arm Limited or its affiliates. All rights reserved.
Non-confidential

- The Requester generates a unique TxnID field.

2. The Completer receives the Request packet and determines that a RetryAck response will be sent. The identifier fields of the RetryAck response are generated as follows:
   - The TgtID is set to the same value as the SrcID of the request.
   - The SrcID is a fixed value for the Completer. This also matches the TgtID received.
   - The TxnID is set to the same value as the TxnID of the request.
   - The DBID field is not valid.
   - The Completer uses a PCrdType value that indicates the type of credit required to retry the transaction.
3. When the Completer is able to accept the retried transaction of a given PCrdType, a credit to the Requester is sent using the PCrdGrant response.
   The identifier fields of the PCrdGrant response are generated as follows:
   - The TgtID is set to the same value as the SrcID of the request.
   - The SrcID is a fixed value for the Completer. This also matches the TgtID of the request.
   - The TxnID field is not used and must be zero.
   - The DBID field is not used and must be zero.
   - The PCrdType value is set to the type required to issue the original transaction again.
4. The Requester receives the credit grant and reissues the original transaction by sending a Request packet. The identifier fields of the request are generated as follows:
   - The TgtID is set to either the same value as the SrcID of the RetryAck response, which is also the same as the SrcID of the PCrdGrant response, or the value used in the original request.
   - The SrcID is a fixed value for the Requester.
   - The Requester generates a unique TxnID field. This is permitted, but not required, to be different from the original request that received a RetryAck response.
   - The PCrdType value is set to the PCrdType value in the RetryAck response to the original request, which is also the same as the PCrdType of the PCrdGrant response.

B2.5.6 Protocol Credit Return transaction

A P-Credit Return transaction uses the PCrdReturn Request to return a granted, but no longer required, credit. The TgtID, SrcID, and TxnID requirements are:

- The Requester sends the Protocol Credit Return transaction by sending a PCrdReturn Request packet. The identifier fields of the request are generated as follows:
  - The TgtID must match the SrcID of the credit that was obtained.
  - The SrcID is a fixed value for the Requester.
  - The TxnID field is not used and must be zero.

The PCrdType must match the value of the PCrdType in the original PCrdGrant that was required to issue the original transaction again.

There is no response or use made of the DBID field associated with Protocol Credit Return transactions.

Copyright © 2014, 2017-2025 Arm Limited or its affiliates. All rights reserved.
Non-confidential